Using Unit Cubes to Determine Volume Name:

Fill each rectangular prism with cubes to determine the volume. Each prisms unit is measured in cm (not to scale).

Ex)

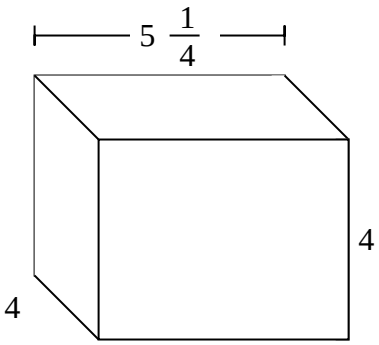

1)

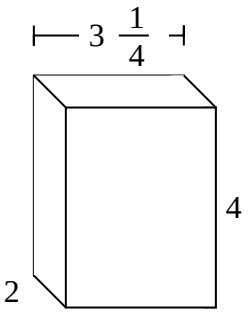

2)

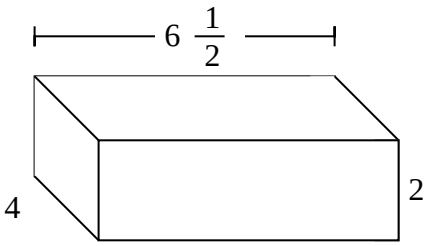

3)

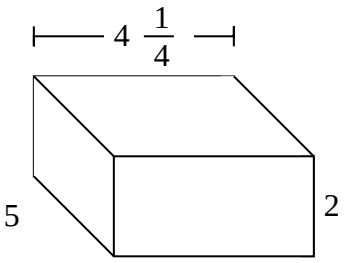

4)

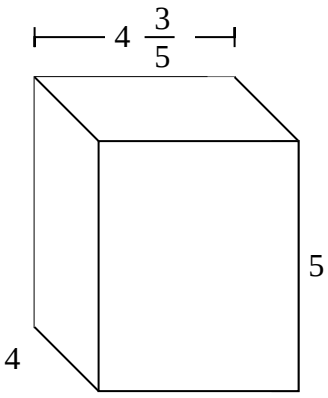

5)

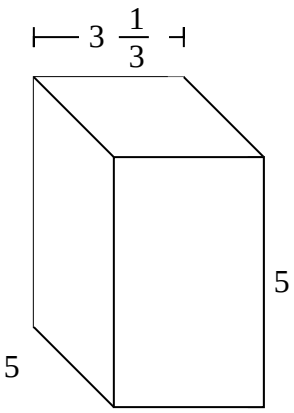

6)

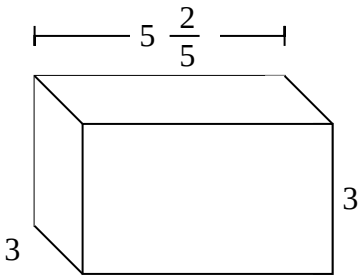

7)

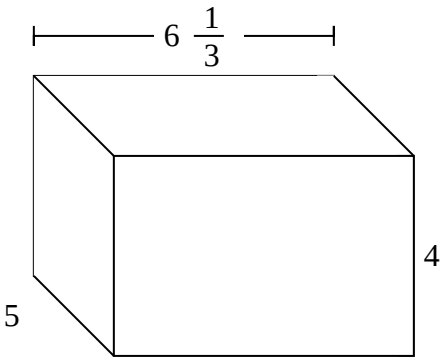

Answers

Ex. 84 cm

1. _____

2. _____

3. _____

4. _____

5. _____

6. _____

7. _____

1-7	86	71	57	43	29	14	0

Using Unit Cubes to Determine Volume Name: **Answer Key**

Fill each rectangular prism with cubes to determine the volume. Each prisms unit is measured in cm (not to scale).

Ex)

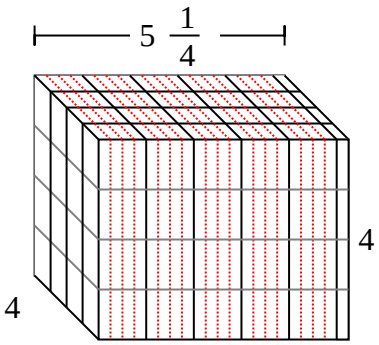

1)

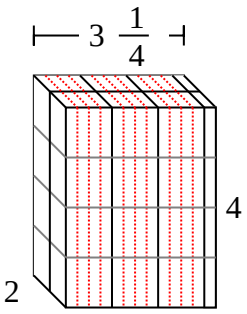

2)

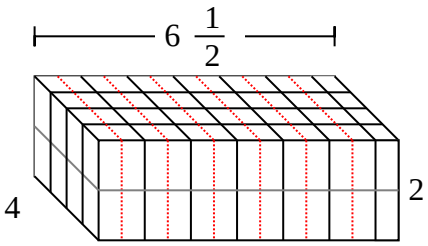

3)

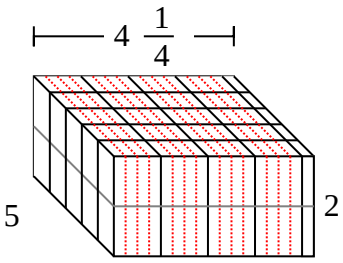

4)

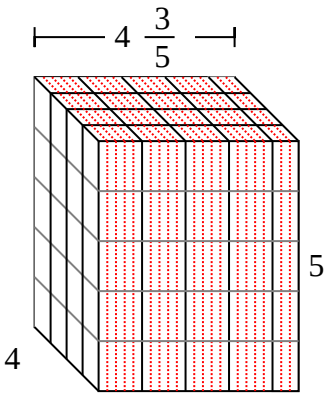

5)

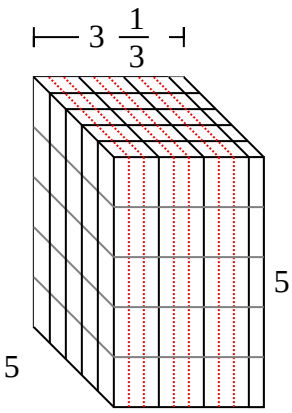

6)

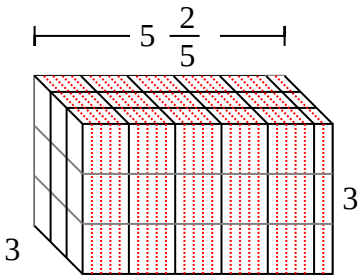

7)

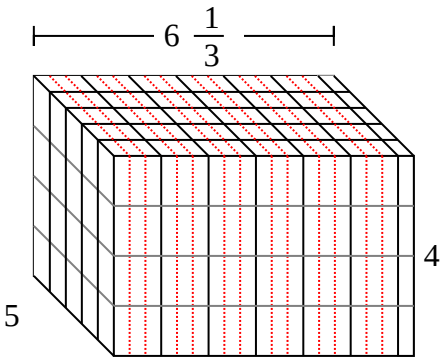

Answers

Ex.	84 cm
1.	26 cm
2.	52 cm
3.	$42\ ^{2}/_{4}$ cm
4.	92 cm
5.	$83\ ^{1}/_{3}$ cm
6.	$48\ ^{3}/_{5}$ cm
7.	$126\ ^{2}/_{3}$ cm

1-7	86	71	57	43	29	14	0